joinery machines

# minimax ls

## sander

scm
woodworking technology

# All “Made in SCM Italy”

## *From casting iron to finished product.*

Come see our production plants and touch the quality of SCM machines;
you will be our guest.

scm
woodworking technology

## minimax
the passion that deserves professional products.

minimax is the line of professional machines for woodworkers, a point of reference for over 40 years worldwide.
SCM's objective is to guarantee customers high quality technologies which meet their requirements in such a way as to make SCM the partner for any needs.

# minimax **ls**
Simple and reliable over time.

Belt sanding machine for edges and surfaces,
extremely simple and reliable over time,
for woodworking shops and
demanding craftsmen.

# double gooseneck narow belt sander ls

| | | ls |
|---|---|---|
| Worktable dimensions | mm | 2500 x 1100 / 3000 x 1100 |
| Sanding belt width | mm | 150 |
| Belt speed | m/sec | 18 |
| Worktable vertical stroke | mm | 580 |
| Gooseneck depth | mm | 820 |
| Three-phase motor (S1) starting from | kW/Hz | 3 (3,6) / 50 (60) |

*Find the complete technical specification at page 7*

**Structure**
zero vibrations

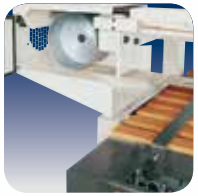

**Pulleys**
speed under control

**Belt Tensioning Device**
easy to use

Belt sanding machine for edges and surfaces, extremely simple and reliable over time, woodworking shops and demanding craftsmen.

# Is machining units

## zero vibrations

**Structure.**
Excellent stability and high precision machining without vibrations, for a top-level finished product, with the heavy duty structures and the perfect sliding of the sliding table. All the controls are easy to use and located within easy located within easy reach of the operator.

## speed under control

**Pulleys.**
The pulleys with 250 mm diameter give high belt speeds for non-clogging sanding even with resinous woods.

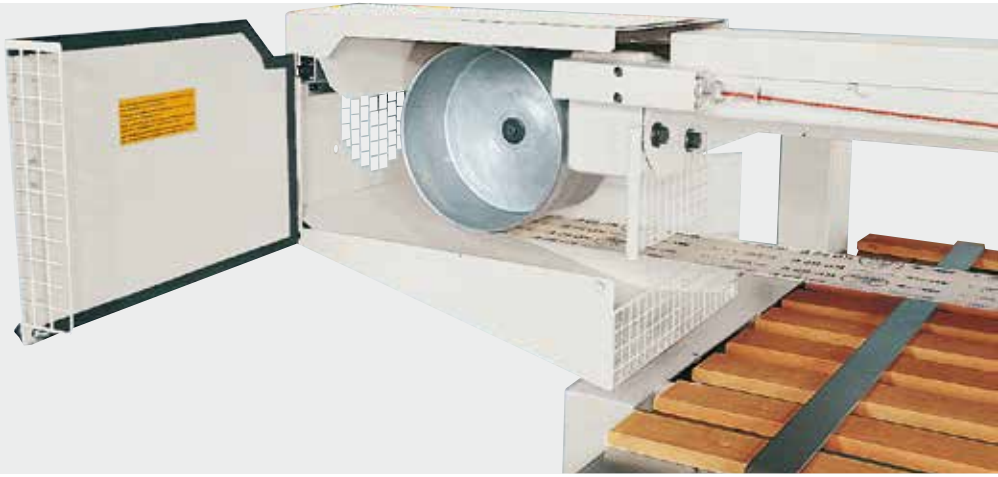

## easy to use

**Belt Tensioning Device.**
It is extremely practical to use and it enabales the belt simple replacement.

# ls dimensions and technical data

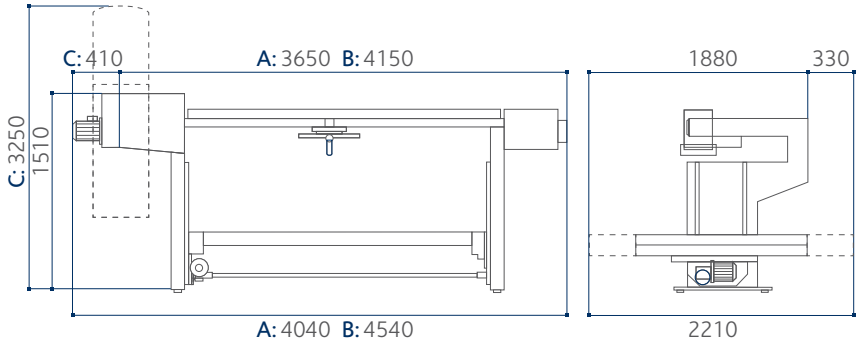


A ls 2500
B ls 3000
C with bag for dust extraction

| | | ls |
|---|---|---|
| Worktable length | mm | 2500 ÷ 3000 |
| Working width | mm | 1100 |
| Vertical stroke of worktable | mm | 580 |
| Abrasive belt width | mm | 150 |
| Abrasive belt length | mm | 7100 |
| Belt speed (CE) | m/sec | 18 |
| Dust extraction outlet diameter | mm | 140 |
| Depth of gooseneck | mm | 820 |
| Pulley diameter | mm | 250 |
| Pad dimensions | mm | 150 x 360 |
| Belt motor with reverse rotation (S1) | kW/Hz | 3 (3,6) / 50 (60) |
| Lifting motor (S1) | kW/Hz | 0,3 (0,4) / 50 (60) |

scm | service

# WE'LL GO THE EXTRA MILE FOR YOU

SCM OFFERS A FULL RANGE OF **HIGHLY SPECIALISED SERVICES** WITH A QUALITY AND RELIABILITY THAT STEM FROM 70 YEARS OF EXPERIENCE IN THE INDUSTRY.

From installation and production start-up to services and maintenance. From training to the supply of specific original spare parts: **we provide solutions designed around you!**

### SERVICE AND MAINTENANCE

- Remote support
- Scheduled maintenance contracts
- Warranty extension

### TRAINING SERVICE

- Courses for machine operators
- Software and programming courses
- Training in production start-up

### SPARE PARTS

- Recommended spare parts list
- E-shop
- Interactive spare-parts catalogues
- Repairs on electronic parts, glue tanks and electro-spindles

### DIGITAL SERVICES

- Maestro Connect - IoT platform to be constantly connected with your machines
- Smartech - assistance with augmented reality
- My Scm portal - opening of service ticket and single point of access to the apps and Services tools

CONTACT

**SCM SERVICE**
via Emilia 77 - 47921 Rimini - Italy
tel. +39 0541 700100
scmservice@scmgroup.com
www.scmwood.com

**SCM SPAREPARTS**
Via Casale, 450 - 47826 - Villa Verucchio (RN) - Italy
tel. +39 0541 674111
spareparts@scmgroup.com
www.scmwood.com

My Scm

# THE STRONGEST WOOD TECHNOLOGIES ARE IN OUR DNA

**SCM. A HERITAGE OF SKILLS IN A UNIQUE BRAND**

70 years of success gives SCM the centre stage in woodworking technology. This heritage results from bringing together the best know-how in machining and systems for wood-based manufacturing.
SCM is present all over the world, brought to you by the widest distribution network in the industry.

**70** years history
**3** main production sites in Italy
**300.000** square metres of production space
**20.000** machines manufactured per year
**90%** export

**20** foreign branches
**400** agents and dealers
**500** support technicians
**500** registered patents

**In SCM's DNA also strength and solidity of a great Group.** The SCM Group is a world leader, manufacturing industrial equipment and components for machining the widest range of materials.

## SCM GROUP, A HIGHLY SKILLED TEAM EXPERT IN INDUSTRIAL MACHINES AND COMPONENTS

### INDUSTRIAL MACHINERY

Stand-alone machines, integrated systems and services dedicated to processing a wide range of materials.

- scm — WOODWORKING TECHNOLOGIES
- Cms — TECHNOLOGIES FOR PROCESSING COMPOSITE MATERIALS, ALUMINIUM, PLASTIC, GLASS, STONE, METAL

### INDUSTRIAL COMPONENTS

Technological components for the Group's machines and systems, for those of third-parties and the machinery industry.

- HITECO — SPINDLES AND TECHNOLOGICAL COMPONENTS
- es — ELECTRIC PANELS
- steelmec — METALWORK
- scmfonderie — CAST IRON

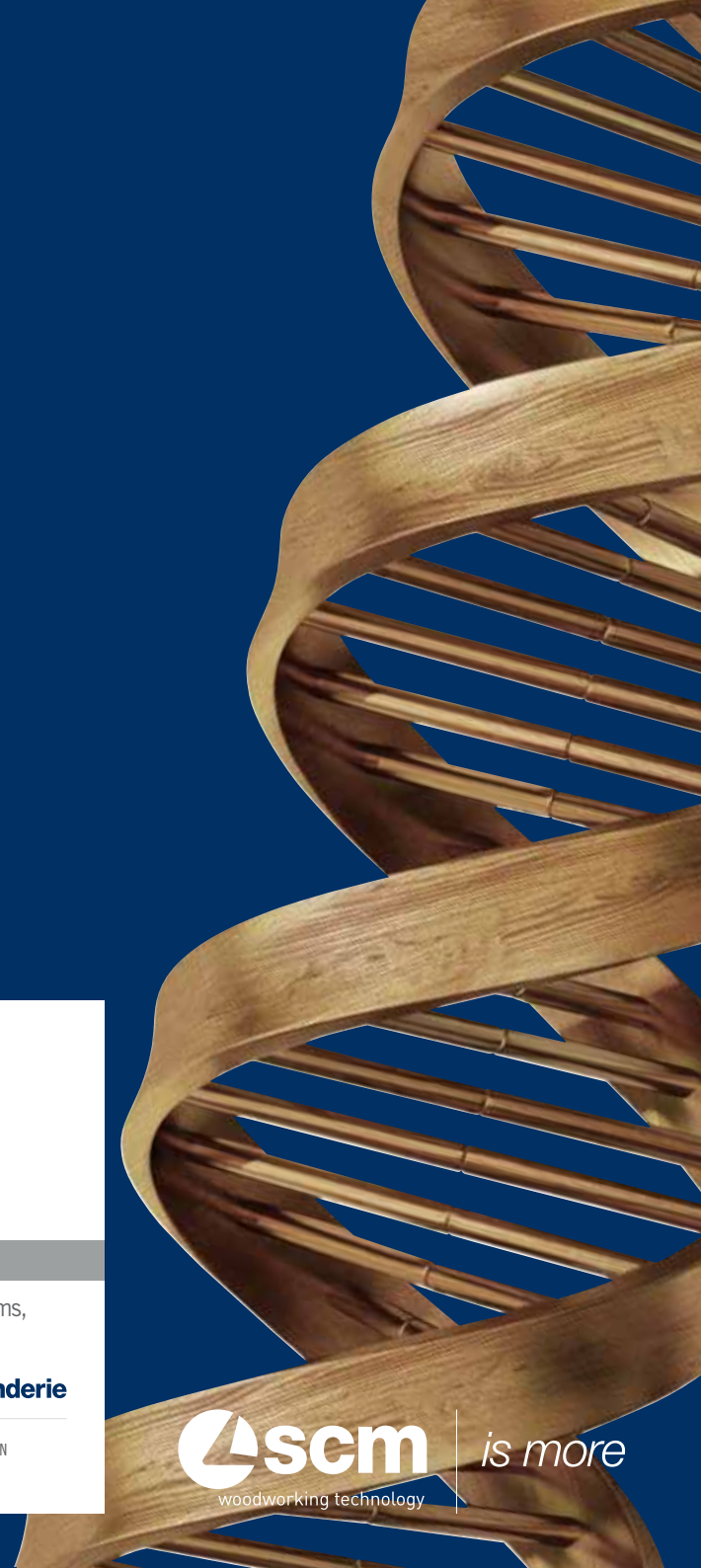

scm woodworking technology | is more

Company of the Scm Group
registered office:
via Emilia, 77
47921 Rimini, Italia
T. +39 0541 700111
F. +39 0541 700232
sales office:
via Casale, 450
47826 Villa Verucchio, Rimini, Italia
T. +39 0541 674111
F. +39 0541 674274
scm@scmgroup.com
www.scmwood.com

Scm Industria Spa
Professional Workshop Machinery
via Valdicella, 7
47892 Gualdicciolo,
Repubblica di San Marino
scm@scmgroup.com
sales dept. Italy:
T. +378 0549 876911
F. +378 0549 999604
foreign sales dept.:
T. +39 0541 674111
F. +39 0541 674274
www.scmwood.com

The motors powers in this catalogue are expressed in S6, except where otherwise specified. In this catalogue, machines are shown in CE configuration and with options. We reserve the right to modify technical specifications without prior notice, provided that such modifications do not affect safety as per CE norms.

rev.02
10/2024

Mic Studio

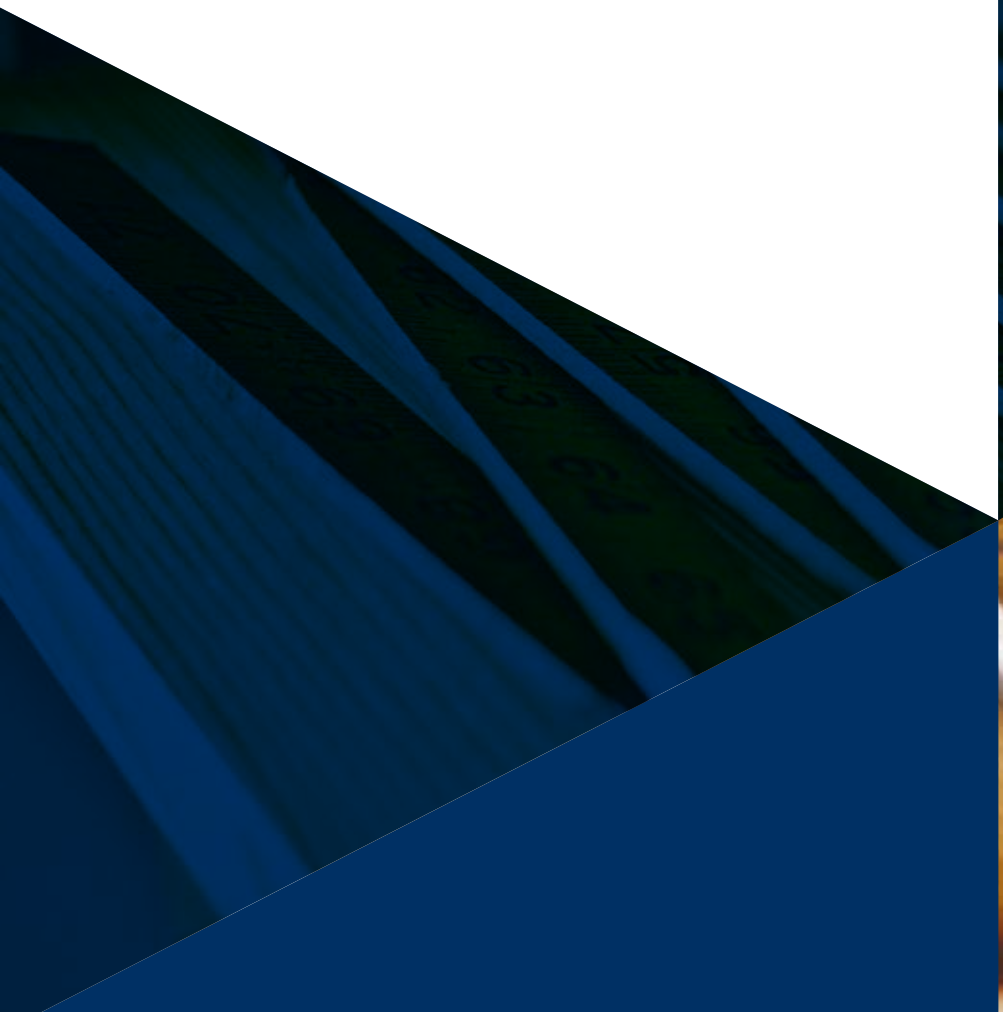

REV. N. 02 - 10.2024 - MIC STUDIO

**SCM GROUP SPA**
via Casale 450 - 47826 Villa Verucchio, Rimini - Italy
tel. +39 0541 674111 - fax +39 0541 674274
scm@scmgroup.com
www.scmwood.com