CNC - **Machining centres** for Timber construction

area xl

5-axis machining centre for wall, ceiling and roof elements

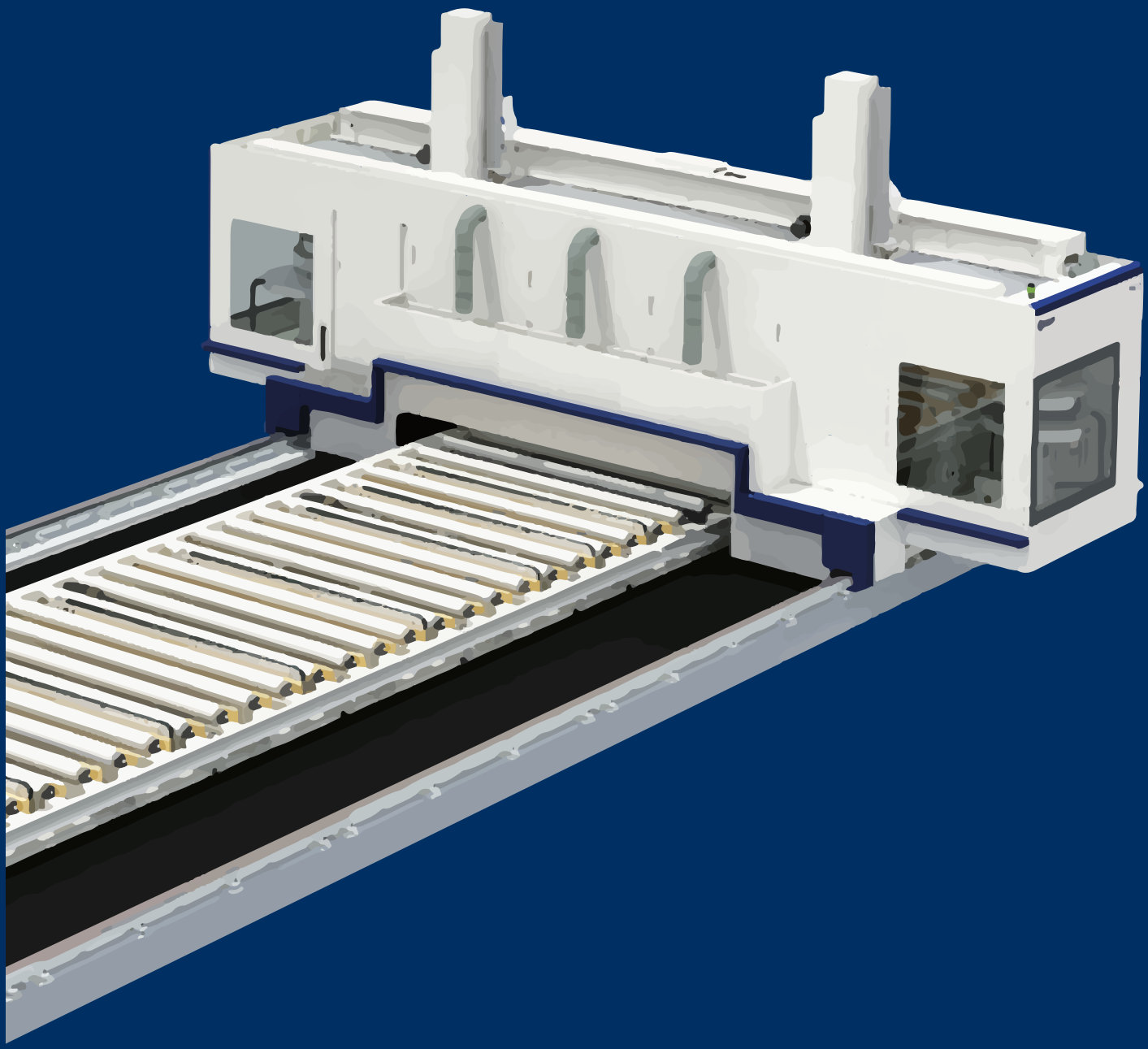

scm
woodworking technology

AREA XL

THE NEW MACHINING CENTRE FOR STRUCTURAL ELEMENTS:

POWER TAKES SHAPE.

6
AREA XL

PRECISION

10

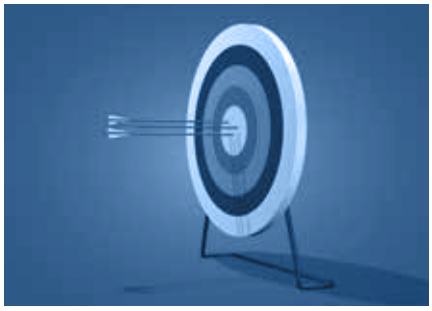

The high rigidity structure ensures optimal absorption of the mechanical stresses generated from element processing and therefore, **extremely precise machining operations even on very hard woods.**

POWER

12

The powerful and high-performance machining head unit allows **heavy duty stock removal with extreme ease**, even in presence of very heavy tools.

Possibility to equip the machining centre with a second machining head unit, in order to execute particular types of machining operations at the same time and to achieve an **increased productivity.**

CONFIGURABILITY

14

Wide choice of tool stores and aggregates: by choosing the right configuration it is possible to carry out **your projects in total freedom and with maximum speed.**

STRENGTH

20

The worktable can be equipped with several options, necessary to the **automatic management of handling, positioning and locking of bulky elements, up to 12,700 kg.**

Area xl can be integrated into plants for the automatic production of large format CLT panels.

CLEANLINESS

22

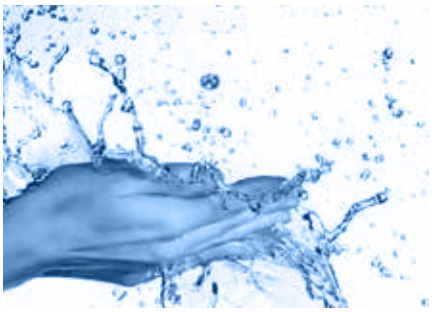

The work area is always clean, thanks to the automatic cleaning systems located inside the cabin, under the worktable and on its sides. Total absence of shavings also on the surfaces of the processed workpieces.

USER FRIENDLINESS

24

eye-M PRO console available to the operator **to control the machine in the most rapid and effective way.**

Video surveillance system for real-time monitoring of all machining phases: Workpiece loading, unloading and processing.

Complete management of the entire production process both by **SCM Maestro beam&wall** software and **DDX EasyWALL** software.

26
Maestro beam&wall software

30
Applications

32
Technical data

OVERVIEW OF TECHNICAL FEATURES

TECHNOLOGICAL ADVANTAGES

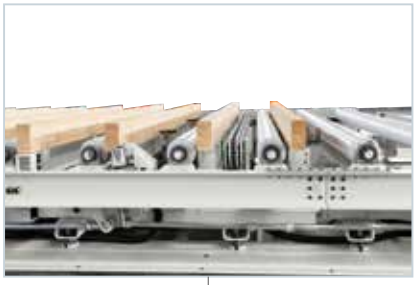

High performance motorized rollers: **Elements feeding speed up to 40 m/min.** Totally automatic referencing of the raw element, thanks to transversal chains and mechanical stops.

Roller worktable that can be integrated into an automatic production line. Possibility of managing raw panels of maximum width 3,600 mm and thickness 400 mm.

Work area constantly clean, thanks to cleaning systems for the automatic removal of shavings from under the worktable and on its sides.

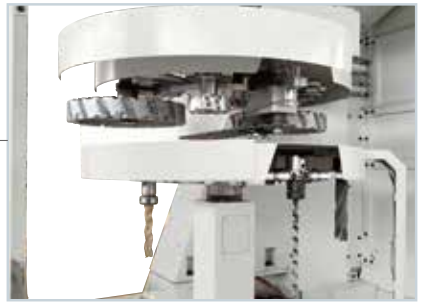

Maximum configurability thanks to n° 6 tool stores for a total of 60 tools, including sawblades and aggregates. Compatibility with very heavy tools.

Video surveillance system for **full control over the machining process:** Cutting operations so as raw material loading and finished workpiece unloading.

The cleaning system for worktable and workpiece adapts automatically to the thickness of the workpiece itself and allows to have the respective **surfaces always free from dust and shavings.**

OVERVIEW OF TECHNICAL FEATURES

TECHNOLOGICAL ADVANTAGES

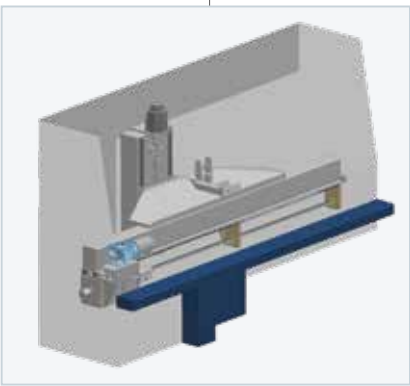

Possibility of making **holes up to 3600 mm deep** on the side surfaces of the element, by means of specific drilling units.

Wide visibility on the work area during cutting operations and tool change, thanks to large windows in Lexan.

Easy access to the inside of the machine through the the front door on the cabin.

Execution of special types of machining operations in parallel and increasing productivity with double machining head unit machine configuration.

Perfect dust containment, thanks to the integral protection cabin and the exhaust system.

Reduced footprint thanks to electrical cabinet, refrigerator for operating units and aggregate lubricant tank all integrated in the gantry.

STRUCTURE

One of the strongpoints of area xl is undoubtedly the main structure of the gantry, which makes it possible to carry out **extremely precise machining operations, even on very hard woods.**

It has been designed to guarantee complete absorption of the mechanical stresses resulting from processing the element, even under heavy duty conditions characterized by high stock removal and the use of the double machining head unit at maximum power.

The structure is configured as a single piece with excellent rigidity. All the stresses to which the gantry is subjected are discharged to the ground by means of sliding tracks.

The **guide system,** specifically designed for gantry-structure machines, ensures a correct alignment of the structure and a high precision.

Even possible misalignments, due to the movement of the flooring are automatically compensated through the **compensation system for the "X" axis.**

The main structure is enclosed within a cabin made up of metal casings and Lexan transparent panels, thus ensuring excellent dust and noise containment.

MACHINING HEAD UNITS

Area xl is equipped with high-performance machining head units in terms of torque and power, allowing to execute **significant material removal with utmost ease.**

Possibility to fit up to two electrospindles releasing **63 kW power at 5000 rpm**, in order to use tools of large dimensions. Tool attachment HSK A 100.

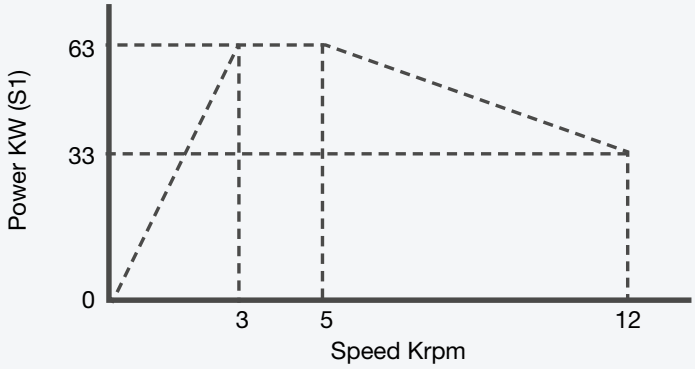

Torque up to 200 Nm is extremely important for the production of CLT panels.

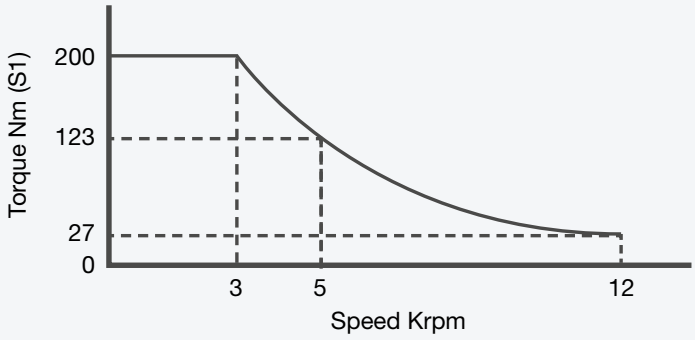

The composition with double machining head unit allows to simultaneously execute particular types of machining operations, **increasing the productivity of the machining centre.**

TOOL STORES

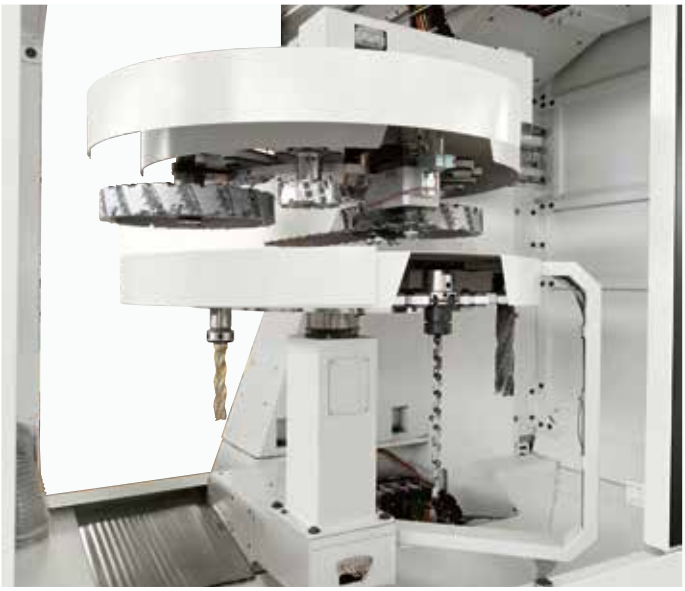

Up to 6 tool stores with a total of 60 tools can be equipped. With area xl, the right tool is always available at the right time.

Tool changes can be carried out in masked time, thanks to the presence of several tooling points and the simultaneous operations being carried out on the machine.

Assembled on the sides of the gantry structure, the 4 circular tool stores are dedicated to accommodate all the tools required for a complete element machining, including very heavy cutters up to 520 mm diameter.

4 additional stations accommodate the aggregates for sawblades with different diameter.

Tool loading can be done either manually or automatically, thanks to the heavy-duty tool station.

AGGREGATES

To cut elements up to 400 mm thick, it is possible to use a **sawblade aggregate of 1150 mm diameter equipped with a dedicated extraction hood.**
It is also possible to equip the machine with an 800 mm diameter sawblade for machining smaller thicknesses.
Tool holder attachment HSK A 100.

The **chainsaw aggregate** allows to quickly execute: 90° openings, cutting with nesting technology, deep grooves and slots.
Automatic lubrication of the chain.
Tool holder attachment HSK A 100.

Planing aggregate equipped with an extraction hood connecting to the extraction system of the machine, to always keep the work area clean and visible.

MACHINING OPERATIONS

Squaring operation, creation of channels and perimeter rebates (routing for the connections of the various elements).

Creation of openings and nesting cuts on “master panel” with a wide range of cutting angles.

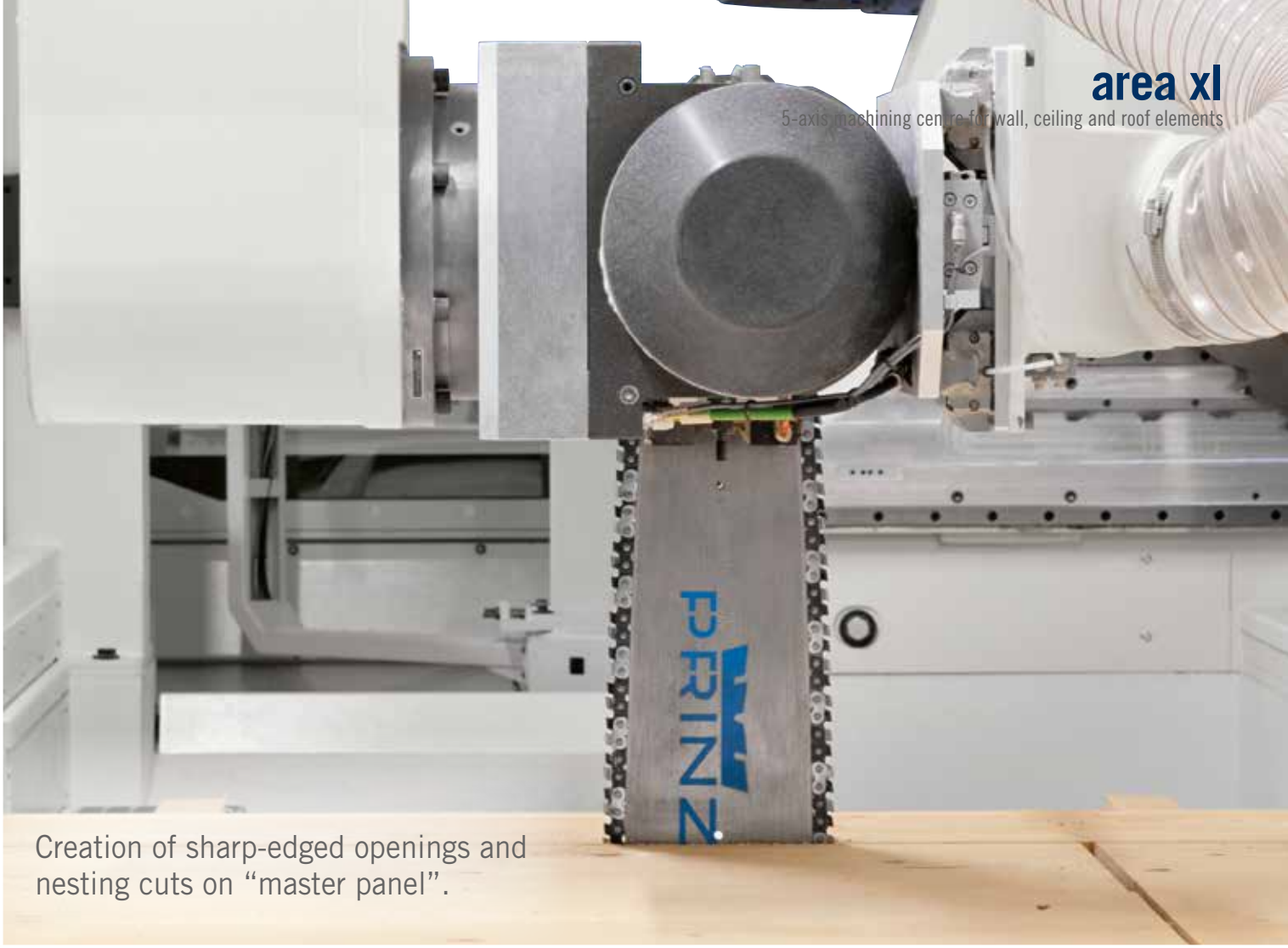

Creation of sharp-edged openings and nesting cuts on “master panel”.

Excellent precision in making through or blind pockets that require high material removal.

MACHINING OPERATIONS

Execution of through or blind pockets of different depths and dimensions for electrical wiring.

Execution of through or blind pockets that are also characterized by non-regular geometries.

Execution of through or blind holes of different depths and diameters, located on the five sides of the panel.

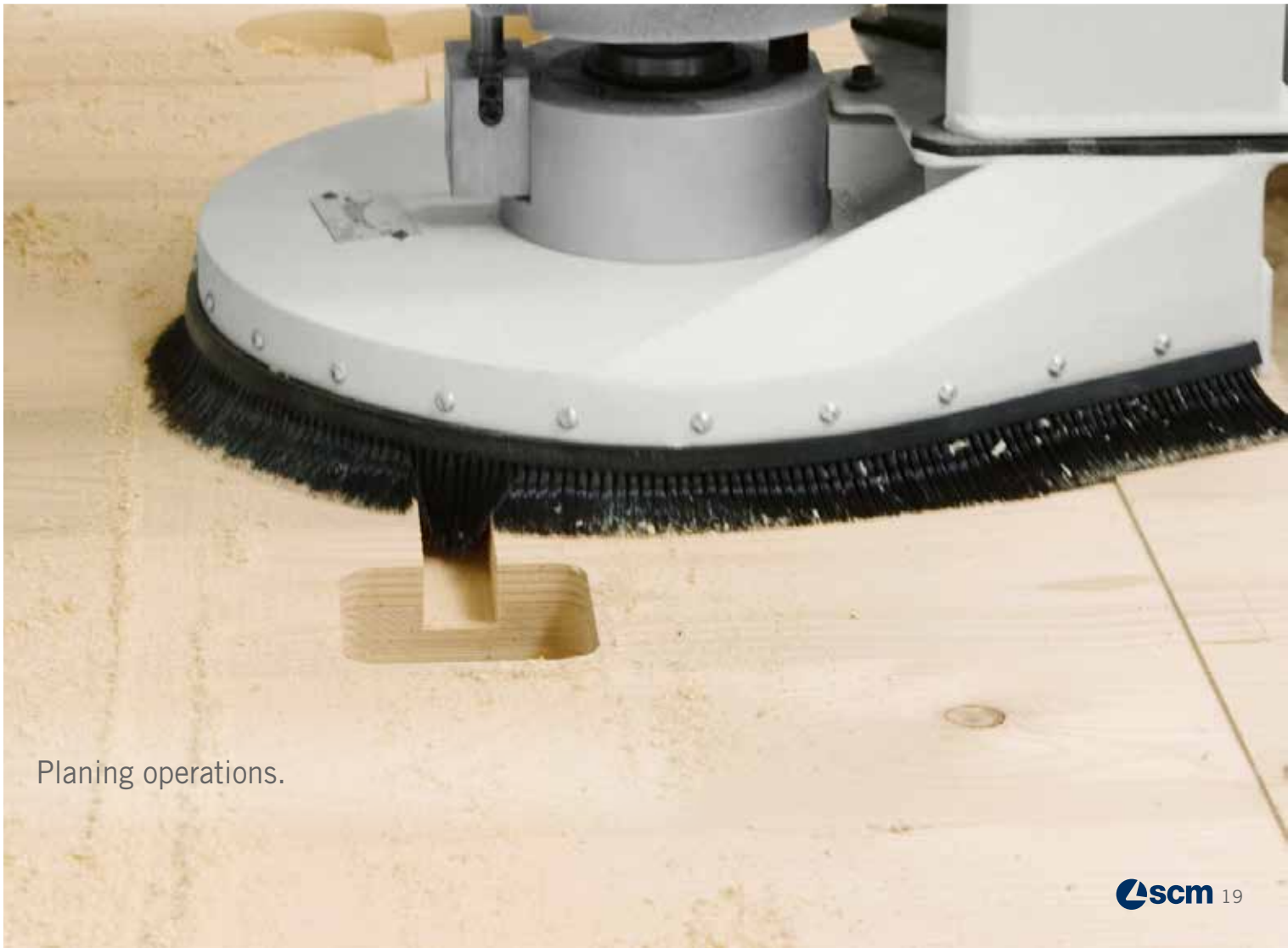

Planing operations.

WORKTABLE

The worktable is characterised by a high degree of configurability and sturdiness.
In standard composition, the structure of the worktable is anchored directly to the floor while the upper part is composed of wooden bars, that can be re-machined several times when surface gets scratched from use.
Excellent flatness is guaranteed by the same wooden bars that support the element.

In the handling, positioning and locking of the panel, it is possible to manage masses of up to 12,700 kg fully automatically.

The perimeter mechanical stops allow to position even large panels correctly. After positioning, the stops are automatically moved out of the way, leaving all sides of the element free.

The laser system simplifies the operation of positioning of bulky and heavy panels, projecting the geometry of the element to be processed.

Even lighter elements can be blocked on the worktable thanks to the suction cup system. The suction cups with automatic exclusion are easily positioned across the work area and connected to the vacuum ports arranged on the machine with quick plug-in connectors on the perimeter of the worktable.

Area xl can be integrated in high productivity automatic lines for the manufacturing of CLT panels, even of large dimensions, thanks **to the rich equipment of the worktable**: motorised rollers, useful for the automatic transport of the panel in longitudinal direction and motorised chains necessary for the fully automatic positioning of the element.

CLEANING SYSTEMS

Special cleaning systems ensure automatic removal of shavings from under the worktable and on its sides.

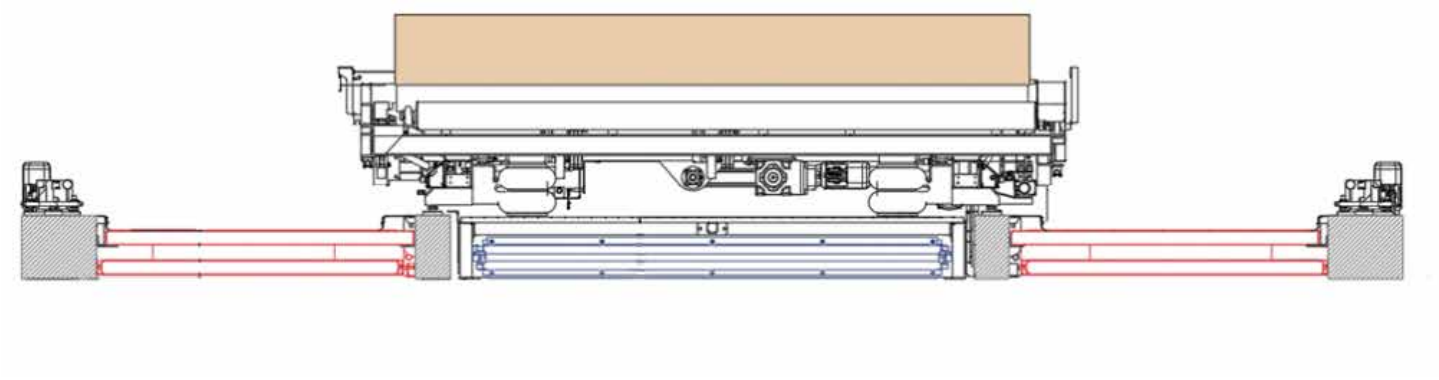

"Redler" type cleaning system positioned under the worktable. Consisting of a series of transverse scrapers moving in a longitudinal direction, this device enables the automatic removal of shavings falling by gravity during machining.

Belt cleaning system positioned on the sides of the worktable. The continuous movement of the conveyor belts allow the automatic evacuation of shavings and small scraps falling by gravity into the space between the worktable and the sliding tracks.

An additional extraction hood, assembled on the front of the gantry, collects shavings remaining on the surface of the processed element; the same system can be used at a later date to clean the worktable wooden bars. The extraction hood is equipped with an NC movement in the “Z” direction, in order to adapt correctly to the thickness of the workpiece.

EYE-M PRO CONSOLE

Machine control is at everyone's reach thanks to touch screen control panel, with an intuitive and powerful operator interface.

Always at your service. The new eye-M PRO console allows connection via internet with the SCM Service. Our engineers can so access remotely to all machine levels to perform diagnostics, solve problems or update the machine logic in real time.

Fixed operator console with two monitors, one dedicated to machine management and one dedicated to the video surveillance system.

Practical and robust remote control with wireless technology, for managing main functions in complete freedom of movement.

Full control over the process.
The video surveillance system allows the operator to monitor in real time the machine status through a display positioned close to the eye-M PRO console.

Use of 4 high-resolution cameras for the control of cutting operations, loading of the raw panel and unloading of the processed element. The system also includes a “video recorder” function.

MAESTRO BEAM&WALL SOFTWARE

YOUR SCM SOFTWARE TO EVERY TECHNOLOGY

Maestro beam&wall is the software developed by SCM allowing to interface with the industry's best design CADs present on the market. With a few clicks, it is possible to switch from importing BTL files to running the work piece on the machine. The software, designed specifically for timber construction, can be used in the office or via an operator console.
Maestro beam&wall gets all information from the CAD that designed the structure and automatically creates every single program.

In this way, Maestro beam&wall:

- is interconnected upstream with the CADs for beams and walls designing
- is interconnected downstream with the on-board interface software.

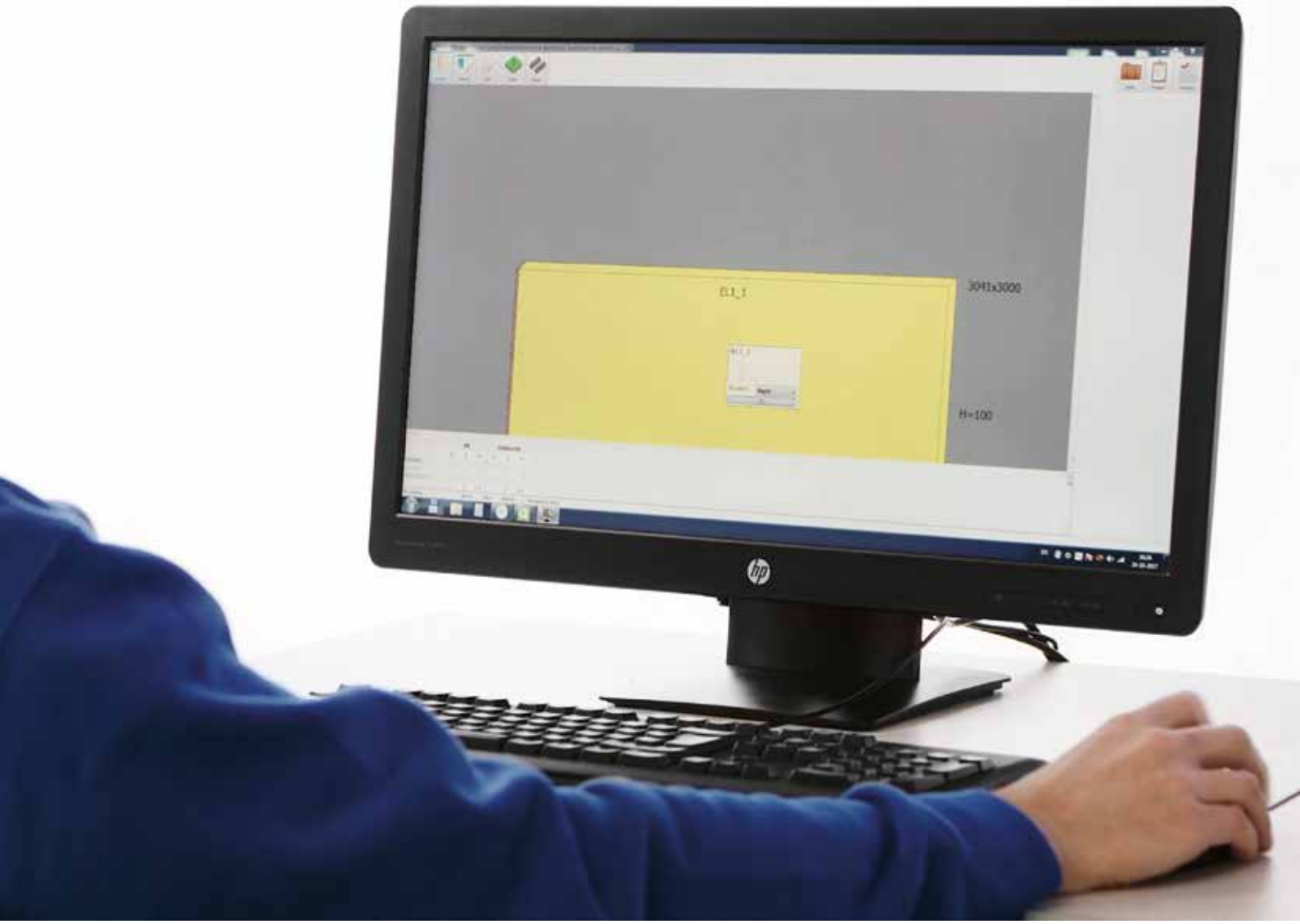

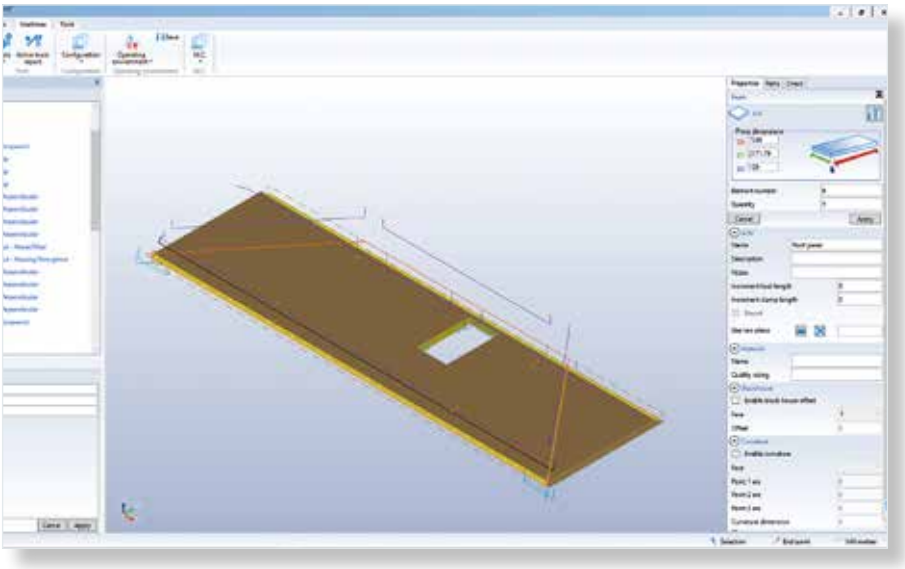

PROGRAMMING ENVIRONMENT

Dedicated to the development, analysis, check and modification of projects and single operations applied.
The programming environment can also be used to manually create new elements by adding operations from the library of available macros.
Automatic association of tools and toolpaths with the designed geometries; possibility to force manually machining strategies other than those automatically selected by the software.

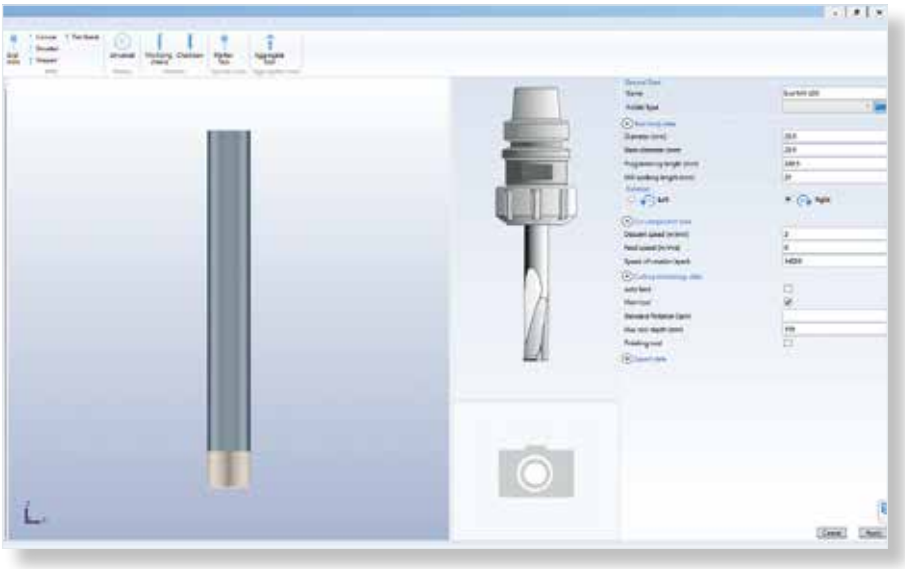

TOOL MANAGEMENT ENVIRONMENT

Dedicated to the graphic display of the machine equipment and to the management of different tool sets, according to the project to be processed.
Within the environment, it is possible to create new tools in a very rapid way, choosing from a wide range of pre-configured models and simply modifying the relative geometric and technological parameters.

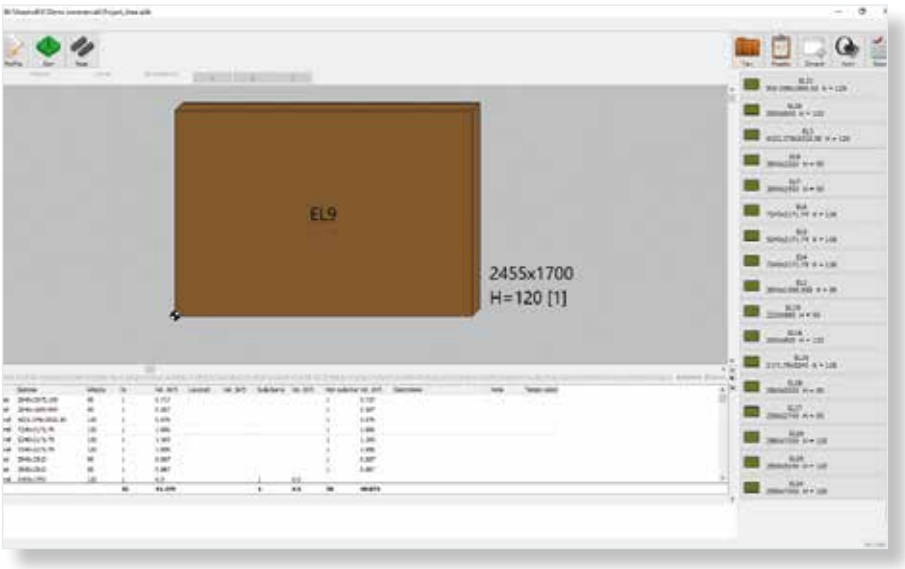

EXECUTION ENVIRONMENT

Dedicated to the execution of elements/projects, it is present on the machine for managing the launch of previously validated programs.
The operator can view the 3D model of the single selected panel with the possibility to perform dimensional measurements.
The execution environment allows the generation of production reports of the projects processed in the machine.

MAESTRO BEAM&WALL SOFTWARE

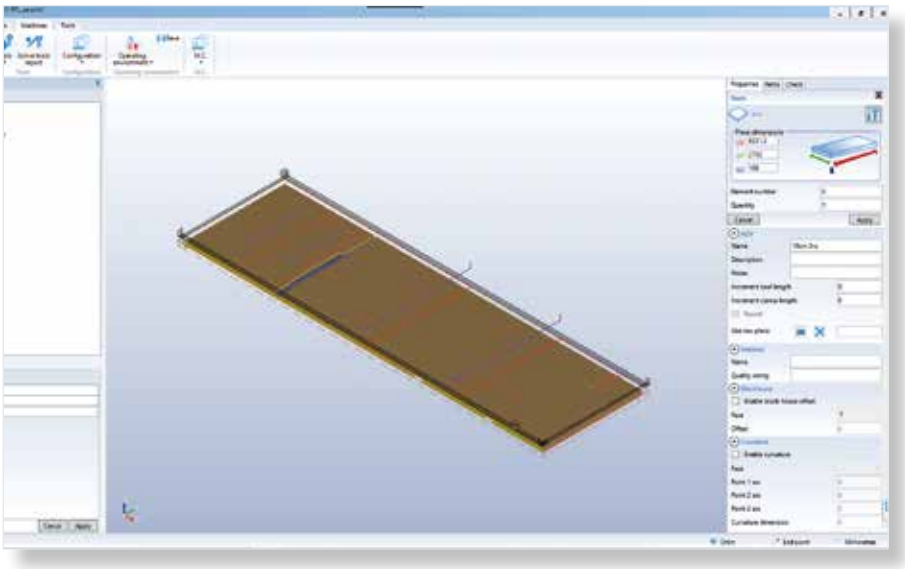

NESTING TECHNOLOGY

A special feature of Maestro beam&wall is the management of exported nesting projects on panels. Interpreting the outline designed on the nested panel, the software manages the sawblade, cutter and chainsaw machining operations leaving, where required and only if necessary, special unprocessed traits (connections) to keep all the elements connected and facilitate the ejection of the finished panel.

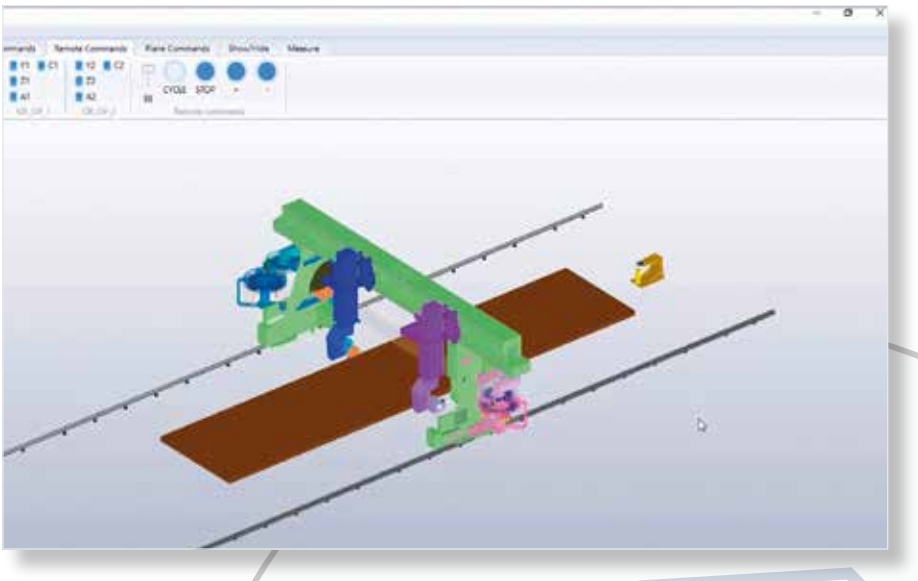

SIMULATION SOFTWARE

After the optimization phase of the operations, it is possible to launch the project simulation and visualize the operations that will be performed during production, with obvious benefits for the customer:

- Elimination of collision risks
- Elimination of errors
- Elimination of downtime
- Calculation of production time
- Calculation of production costs.

EASYWOOD SOFTWARE

Area xl is also compatible with the **EasyWOOD software, designed and developed by DDX.**

As Maestro beam&wall, EasyWOOD, equipped with the EasyWALL module, allows to interpret projects exported with .btl format automatically creating the corresponding machine programs.

EasyWOOD includes a virtual simulator, which reproduces the movements of the real machine and provides an estimate of the panels machining time.

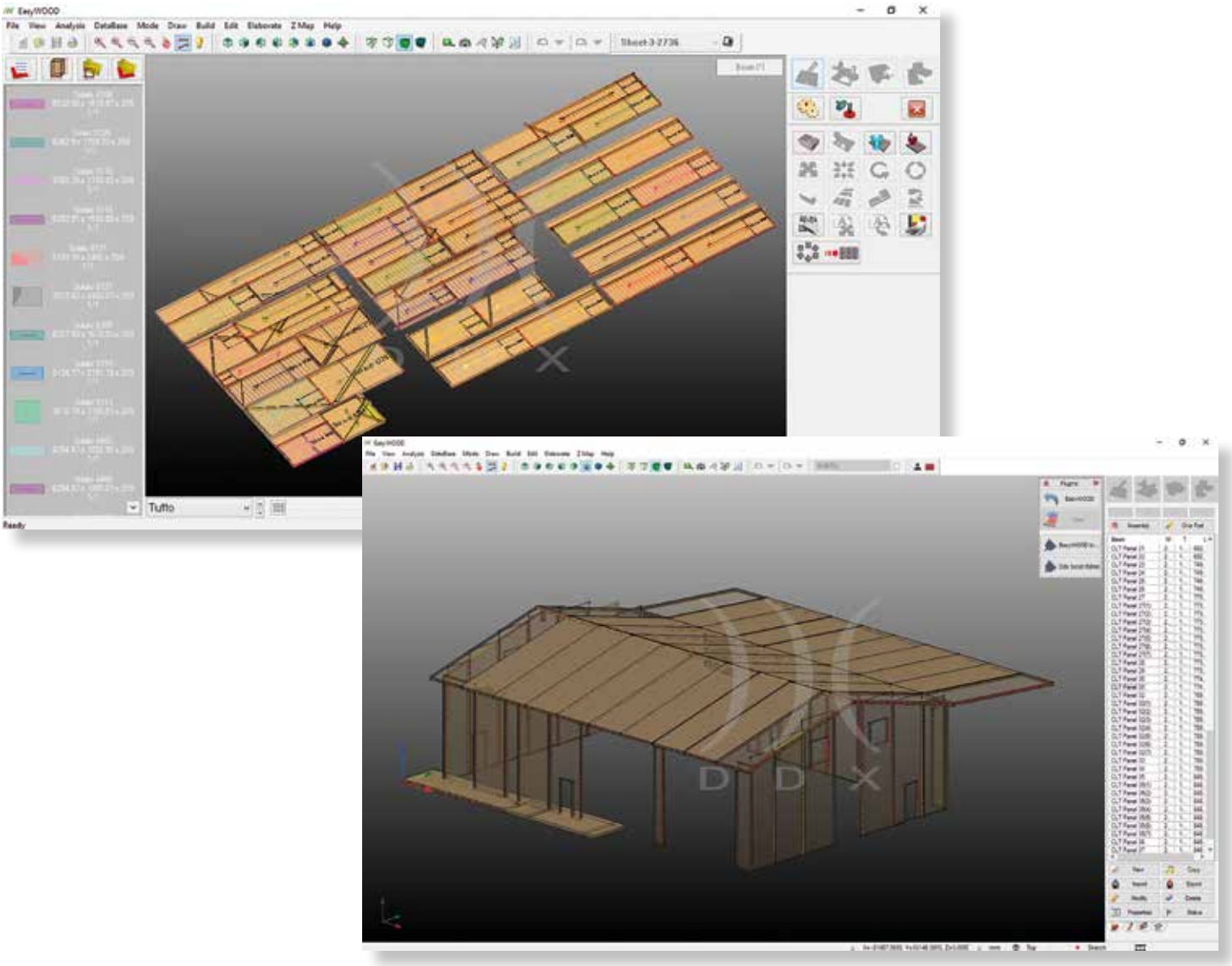

APPLICATIONS

Area xl is a 5-axis machining centre with gantry-structure, specifically designed to process CLT panels even of large dimensions.

It can be integrated into high-productivity automatic lines.

AREA XL

AT THE CUTTING EDGE OF TODAY'S TECHNOLOGY, TO BUILD ON INTO THE FUTURE

TECHNICAL DATA

ELEMENT DIMENSIONS AT INFEED		
Min/max. Length	mm	2.100 – 16.000
Min/max. Width	mm	500 – 3.600
Min/max. Thickness	mm	20 - 400
ELEMENT DIMENSIONS AT OUTFEED		
Min/max. Length	mm	1.100 – 16.000
Min/max. Width	mm	500 – 3.600
Min/max. Thickness	mm	20 - 400
LINEAR AXES		
X-axis speed	m/min	48
Y-axis speed	m/min	75
Z-axis speed	m/min	50
MACHINING HEAD UNITS		
Max. Power (S1)	kW	63
Max. Speed rotation	rpm	12.000
Max. Torque (S1)	Nm	200
Tool attachment	-	HSK 100 A
TOOL STORES		
Available tool stores	Tot. N°	6
Available tools	Tot. N°	60
Sawblade diameter	mm	1150 - 800

COMPANY WITH QUALITY SYSTEM CERTIFIED BY DNV GL = ISO 9001 =

The technical data can vary according to the requested machine composition. In this catalogue, machines are shown with options. The company reserves the right to modify technical specifications without prior notice; the modifications do not influence the safety foreseen by the CE Norms.

Maximum recorded noise levels based on functioning parameters established by EN 848-3-2012.
Acoustic pressure while working (routing) 88.6 dB(A) (measured according to EN ISO 11202:2010, K variance = 4dB).
Acoustic power while working (routing) 98 dB(A) (measured according to EN ISO 3746:2010, K variance = 4dB).

Despite the existence of a correlation between "conventional" noise emission values mentioned above and average personal exposure of the operators during the 8 hours, these also depend on the specific functioning conditions, length of exposure, acoustics characteristics of the working environment and by the presence of additional sources of noise, that is the number of machines and adjacent processes.

LAYOUT

CONFIGURATION WITH 1 MACHINING HEAD UNIT

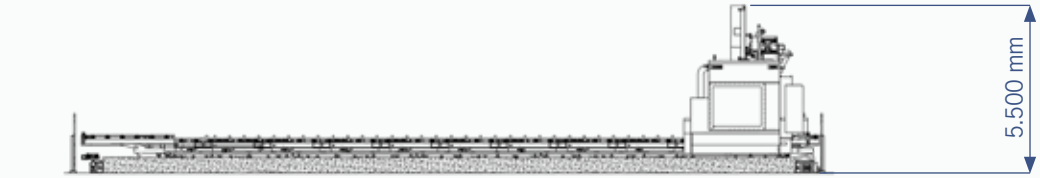

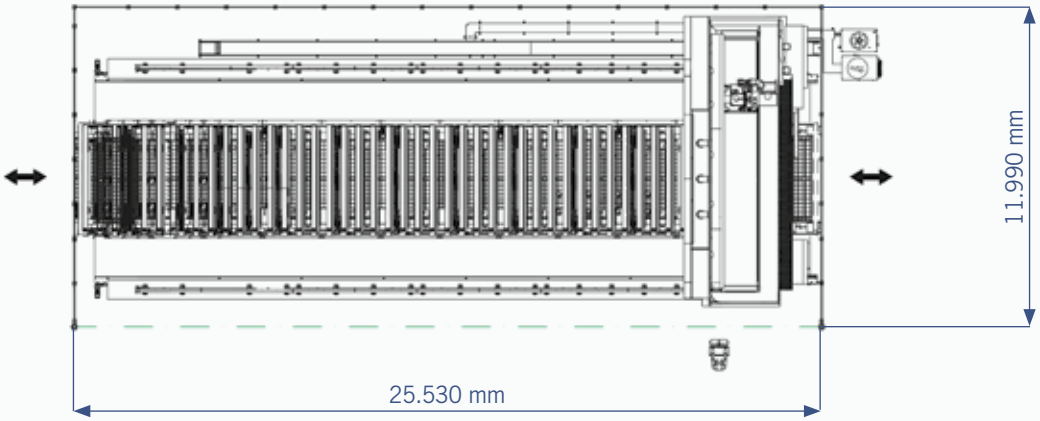

CONFIGURATION WITH 2 MACHINING HEAD UNITS

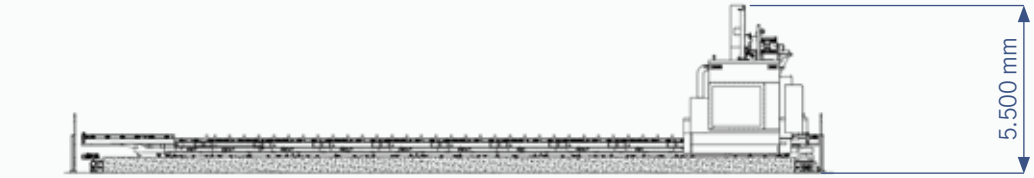

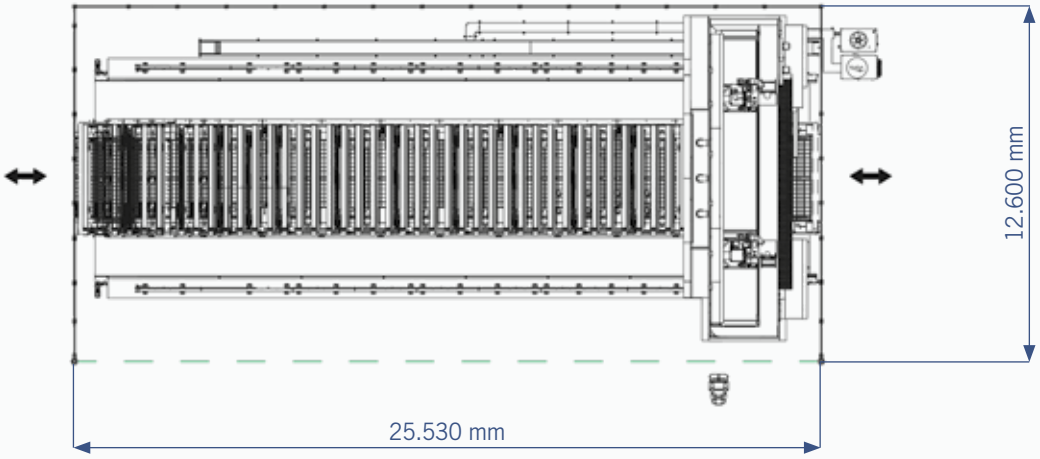

scm | service

WE'LL GO THE EXTRA MILE FOR YOU

SCM OFFERS A FULL RANGE OF **HIGHLY SPECIALISED SERVICES** WITH A QUALITY AND RELIABILITY THAT STEM FROM OVER 65 YEARS OF EXPERIENCE IN THE INDUSTRY.

From installation and production start-up to services and maintenance. From training to the supply of specific original spare parts: **we provide solutions designed around you!**

SERVICE AND MAINTENANCE

- Remote support
- Scheduled maintenance contracts
- Warranty extension

TRAINING SERVICE

- Courses for machine operators
- Software and programming courses
- Training in production start-up

SPARE PARTS

- Recommended spare parts list
- E-shop
- Interactive spare-parts catalogues
- Repairs on electronic parts, glue tanks and electro-spindles

DIGITAL SERVICES

- Maestro Connect - IoT platform to be constantly connected with your machines
- Smartech - assistance with augmented reality
- My Scm portal - opening of service ticket and single point of access to the apps and Services tools

CONTATTI

SCM SERVICE
via Emilia 77 - 47921 Rimini - Italy
tel. +39 0541 700100
scmservice@scmgroup.com
www.scmwood.com

SCM SPAREPARTS
Via Casale, 450 - 47826 - Villa Verucchio (RN) - Italy
tel. +39 0541 674111
spareparts@scmgroup.com
www.scmwood.com

My Scm

THE STRONGEST WOOD TECHNOLOGIES ARE IN OUR DNA

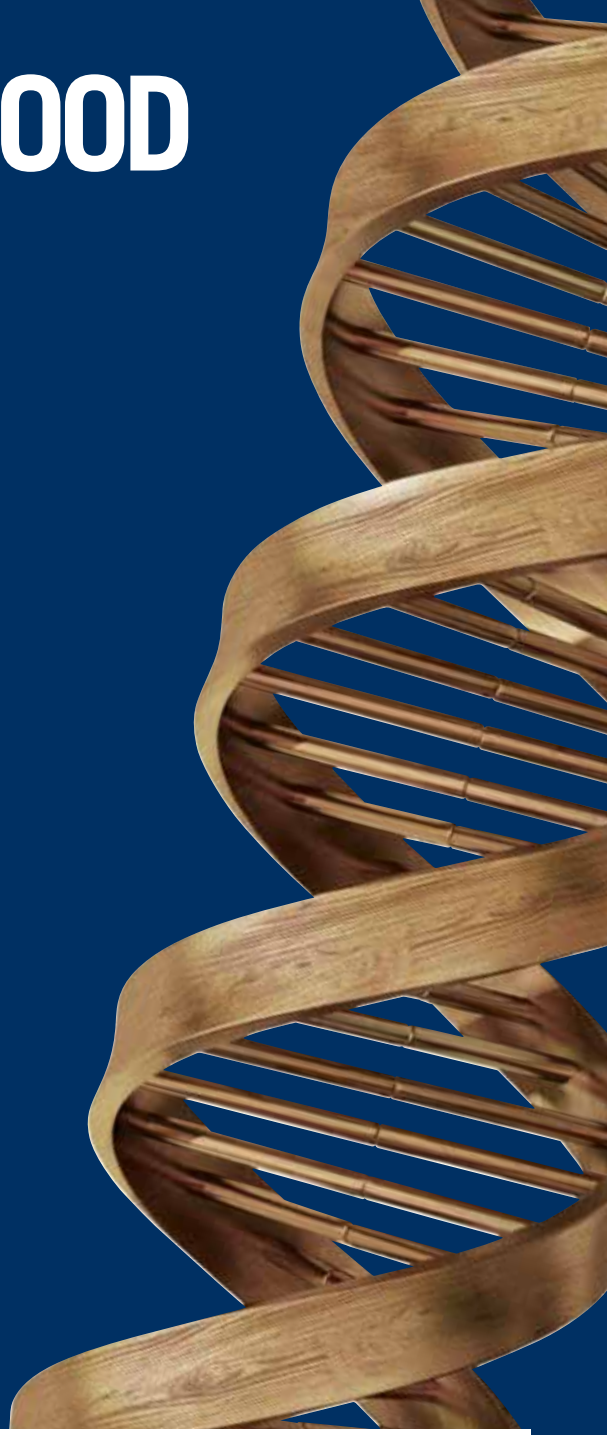

SCM. A HERITAGE OF SKILLS IN A UNIQUE BRAND

Over 65 years of success gives SCM the centre stage in woodworking technology. This heritage results from bringing together the best know-how in machining and systems for wood-based manufacturing. SCM is present all over the world, brought to you by the widest distribution network in the industry.

65+ years history
3 main production sites in Italy
300.000 square metres of production space
20.000 machines manufactured per year
90% export
20 foreign branches
400 agents and dealers
500 support technicians
500 registered patents

In SCM's DNA also strength and solidity of a great Group. The SCM Group is a world leader, manufacturing industrial equipment and components for machining the widest range of materials.

SCM GROUP, A HIGHLY SKILLED TEAM EXPERT IN INDUSTRIAL MACHINES AND COMPONENTS

INDUSTRIAL MACHINERY

Stand-alone machines, integrated systems and services dedicated to processing a wide range of materials.

- scm — WOODWORKING TECHNOLOGIES
- Cms — TECHNOLOGIES FOR PROCESSING COMPOSITE MATERIALS, ALUMINIUM, PLASTIC, GLASS, STONE, METAL

INDUSTRIAL COMPONENTS

Technological components for the Group's machines and systems, for those of third-parties and the machinery industry.

- HITECO — SPINDLES AND TECHNOLOGICAL COMPONENTS
- es — ELECTRIC PANELS
- steelmec — METALWORK
- scmfonderie — CAST IRON

scm woodworking technology | *is more*

REV. N. 00 - 06.2021

SCM GROUP SPA
via Casale 450 - 47826 Villa Verucchio, Rimini - Italy
tel. +39 0541 674111 - scm@scmgroup.com
www.scmwood.com

00L0583192C